ACAT
TEL. 81 8354 8910
www.acatmexicana.com

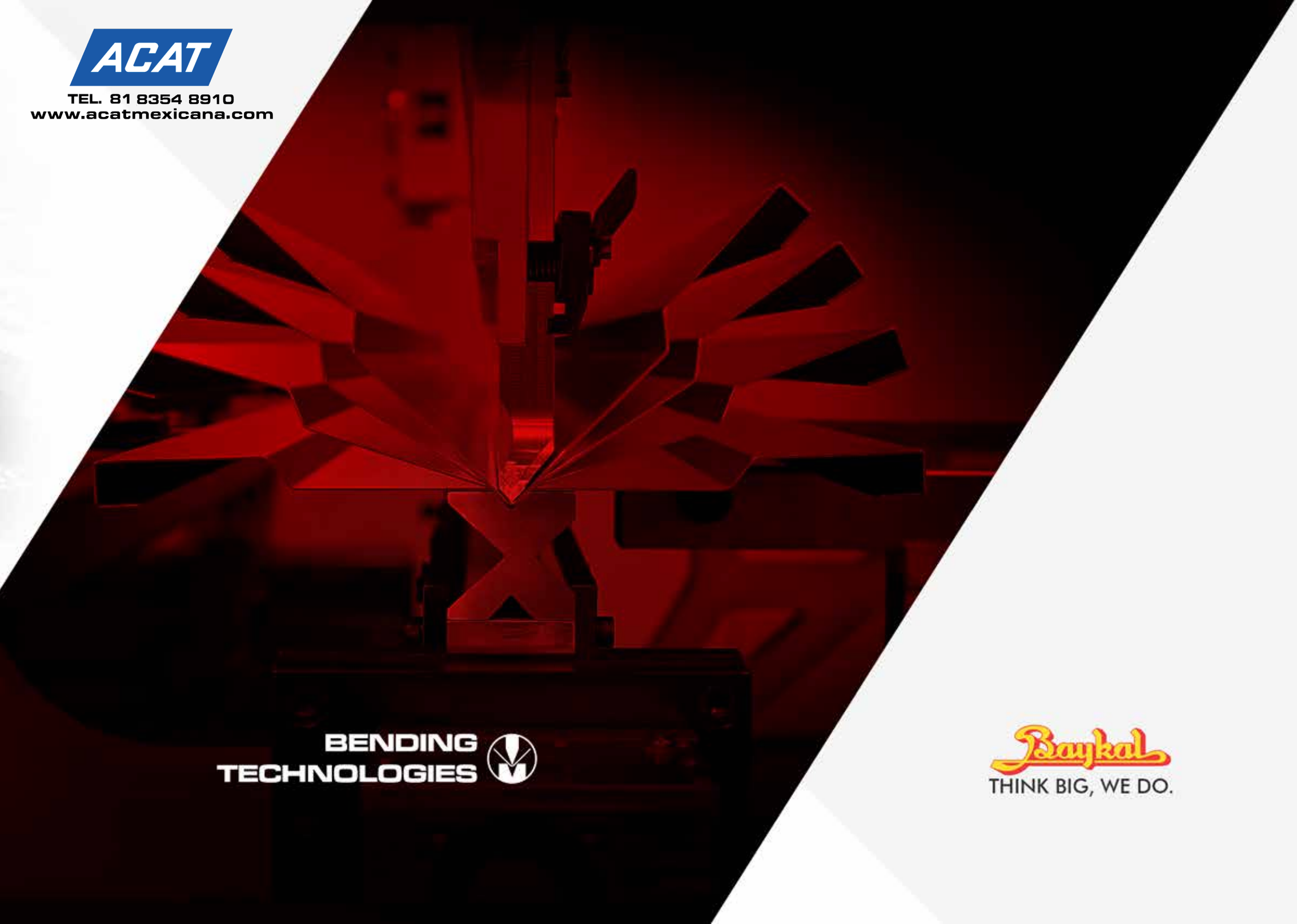

BENDING TECHNOLOGIES

Baykal
THINK BIG, WE DO.

“THINK BIG, WE DO.”

Baykal
APHS PRO 31240
19

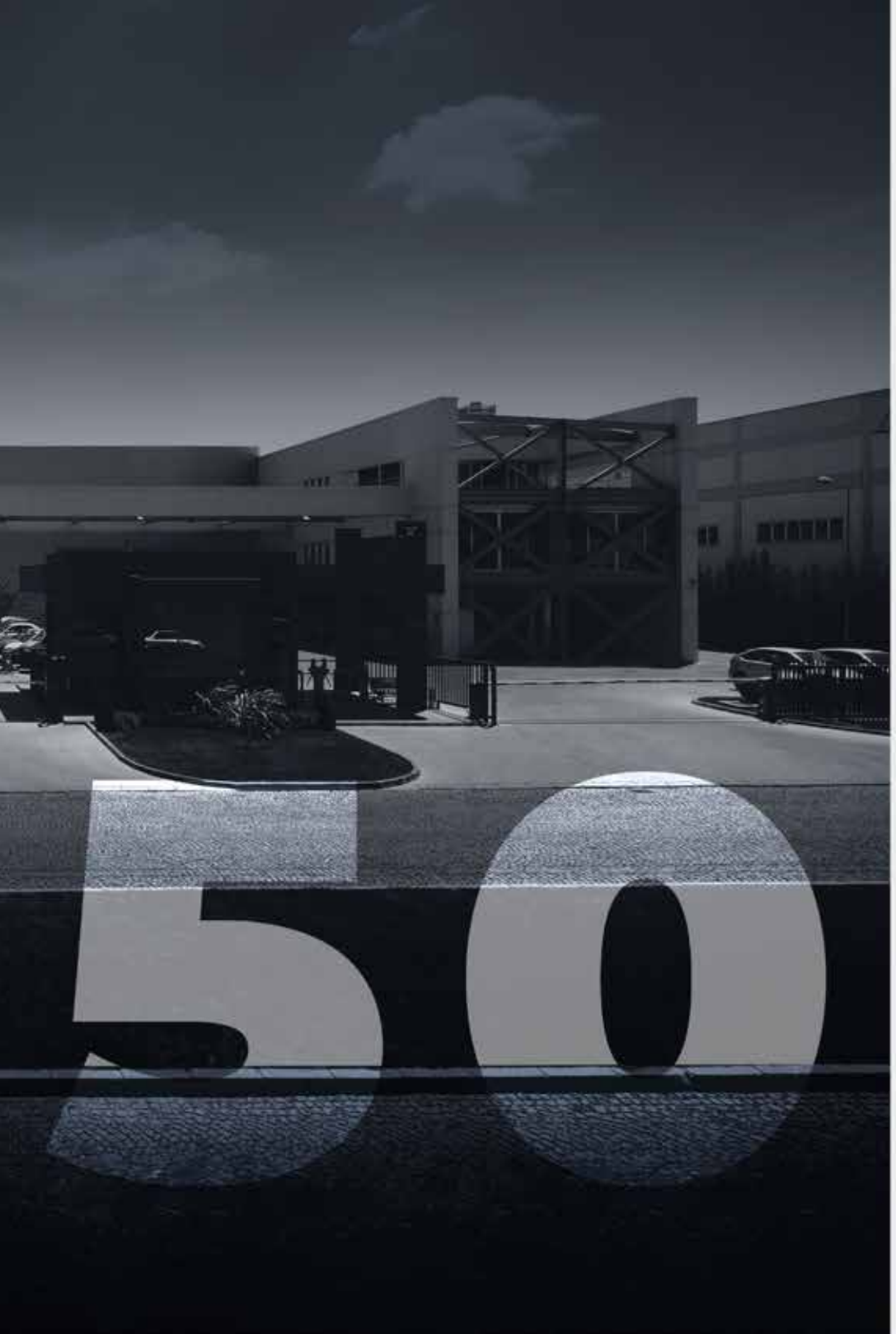

From Past to *Future*

With a foundation history going back to the early 1950s, Baykal today is placed as a leading manufacturer and global supplier of sheet metal working machinery specializing in the production of press brakes, shears, notchers, punching machines, laser cutting systems, plasma cutting machines, and Vertical Machining Centers.

For its manufacturing operations, Baykal utilizes three factories which together combine a production area of 70,000 square meters, making it one of Europe's largest facilities for sheet metalworking and fabricating machinery. The total workforce at Baykal is currently numbered at 650 employees and is composed of highly trained and qualified machine operators and assembly technicians supported by a staff of 80 engineers. All the machines offered by Baykal are designed, manufactured, assembled, and finished wholly at Baykal's purpose-built plants in a CAD environment with extensive use of CNC machining and modern workshop equipment.

Baykal company is accredited for the ISO 9001 Certification issued by the German TÜV NORD institution. Also, since 1995, Baykal has been building machines in conformity with the European CE regulations for safety, being the first Turkish machine-tool manufacturer certified eligible to bear the CE Mark on its products. In addition, all Baykal products are manufactured with the TSE and TSEK quality certificates issued by the Turkish Standards Institution.

Since the last 50 years, Baykal has progressed to become a major exporter of sheet metal working machines to the world markets with customers located in all the machine-tool consuming countries of the global geography from the Americas to Australasia. Baykal is currently represented in over 100 countries worldwide through appointed dealers. In the base market of Turkey, Baykal sheet metal working machines have traditionally commanded a leading market share thanks to the company's pioneering role in the development of Turkey's machine industry and its never-lessening emphasis on quality and service. Here, with a long engineering experience behind it, Baykal wishes to present itself as a quality-conscious, professional machine-building company serving the industry.

BENDING

APHS HYBRID

APHS HYBRID is a press brake in which speed and efficiency meet, combining the advantages of both hydraulic and electrical machines. While processes are performed fast and accurately, less energy and oil are used thoughout process. Also performing silent, APHS HYBRID exihibits eco-friendly results.

APHS MILD HYBRID

Baykal Mild Hybrid technologies in press brakes offer significant advantages for modern manufacturing, enhancing energy efficiency by combining electric and hydraulic power to reduce overall energy costs. These systems capture and reuse energy generated during operations, leading to a lower carbon footprint and contributing to sustainable practices.

S FAMILY

APHS PRO

APHS PRO redefines strength in its class. Its robust structure allows to serve for a long life. Since APHS PRO has a wide range in capacity, its flexibility may satisfy customer requirements perfectly.

APHS

APHS is a hydraulic press brake with a robust and compact design. Its range may be up to 4m and 300 tons which can meet customer demands well. User friendly APHS exhibits high price/performance ratio as well.

APHS HYBRID

01

ACCURATE

Because each side of the APHS HYBRID press brake is independently operated by its own hydraulic system, it is an on-demand direct drive system. It is very fast, accurate and repeatable.

02

AFFORDABLE

While still not the least expensive option, the Hybrid brake technology allows for a more efficient hydraulic system design.

03

FLEXIBLE

Large range of lengths and tonnages are available.

04

COST EFFECTIVE

Up to 60% energy savings while in standby and a 45% savings during forming with a likely total of 60% savings over one hour with 15 press cycles. That's a very big deal when you are looking at saving energy and operating costs.

05

QUIET

When it's in standby mode (all axis not moving), the hydraulics are not running.

06

SAFE

Most hybrid machines are incorporating a great deal of safety into their designs including lasers and other features to improve operator safety.

Customer
Benefits

User Friendly
Easy to install, use and maintain

Modular
Capable of meeting any production need, with a variety of possible configurations

Energy Efficient
Less energy required because pump motor is active only when the machine is working

Productive & Fast
High productivity due to reduced cycle times and higher process reliability

Green
50 % less energy and oil consumption in average compared to the Standard Hydraulic Press Brakes.

High Output with
Top Quality

Significantly low oil consumption compared to the hydraulic press brakes.

- **More savings**
- **Less environmental impact**
- **Fewer maintenance costs**
- **Fast production**

The Hydraulic system is directly connected to two small oil tanks. The advantage is that the CNC press brake is more precise and is not affected by temperature variation, as opposed to hydraulic machines.

The advantage of the hybrid machine is to run the hydraulics with servo motors only during bending and go off during standby which brings about half as much electrical energy. The hybrid system allows the machine to consume energy only when the pedal is activated.

APHS MILD HYBRID

01

ACCURATE

It's rapid, accurate, and repeatable thanks to the design and hydraulic system.

02

EFFICIENCY

The hybrid brake technology allows a more efficient hydraulic system design.

03

FLEXIBLE

Wide range of lengths and tonnages are available.

04

SUSTAINABILITY

It's rapid, accurate, and repeatable thanks to the design and hydraulic system.

05

QUIET

When it's on standby mode (all axis are idle), the hydraulics are not running.

06

SAFE

High safety for operators
Suitable for CE Standards

APHS PRO

01

ACCURATE

It's very fast, accurate, and repeatable thanks to the design and hydraulic system.

02

AFFORDABLE

APHS PRO Series combined with high quality and well-priced.

03

FLEXIBLE

A large range of lengths and tonnages are available.

04

EFFICIENT

APHS PRO series hydraulic press brakes have great efficiency and productivity.

05

QUICK INSTALLATION

Fast and easy installation allows time-saving.

06

SAFE

High safety for operators.
Suitable for CE Standards.

Hydraulic Technology:
Proven Itself

APHS PRO Series has a hydraulic system that is very precise, effective, and proven itself.

Hydraulic systems are used for a long time and the benefits of this technology include such;

User Friendly
Easy to install, use and maintain

Modular
Capable of meeting any production need, with a variety of possible configurations

Bending Complex Parts
Bending complex parts are easier with longer stroke and daylight

Productive
High productivity through reduced cycle times and higher process reliability

Flexible
Suitable for a wide range of products

Headlines to Enhance Your Worklife

APHS PRO model CNC Press Brakes are fast, accurate, and repeatable. It has the best prices and quality in the market. With affordable prices, you can get the best product and compensate for the investment in the shortest time. APHS PRO models have a wide variety of machine lengths and tonnages. APHS PRO Series Hydraulic Press Brakes are productive and cost-efficient machines that prove themselves as being one of the world's brands.

APHS

01

COMPACT

Up to 4100 mm, and 300 tons.

02

FLEXIBLE

Flexible and customizable optional features in order to meet your most demanding in flexibility.

03

EFFICIENT AND ECONOMICAL

Best BAYKAL quality with simple operation and an attractive price-performance ratio.

04

PRODUCTIVITY

Minimizes production cost with high speed, quality and superior bending ability.

05

ROBUST DESIGN

Monoblock welded body structure with static and dynamic rigidity.

06

USER-FRIENDLY AND ERGONOMIC

Operation is easy and intuitive.

Standard Control Units

CYBELEC 12 PS

Standard for APHS

- 4 axes control (Y1-Y2-X-R).
- TouchProfile 2D graphic part creation with manual sequencing.
- Bend allowance calculation.
- Pressure – crowning calculation.
- Each part or bend can have its specific tools.
- Punch depth calculation.
- Angle and back gauge correction.

ESA 640

Standard for APHE
Option for APHS

• All-in-one Monoboard
• Resistive 15 ”Tft LCD HD Touch color screen
• For all applications up to 6 axes
• Ergonomic and easy to use HMI
• 32 + 32 I / O with integrated PLC
• 1 Ethernet port + 1 optional
• 2 RS-232 serial ports
• 2 USB 2.0 ports
• 4 analog inputs + 2 analog outputs
• 1 CANopen port
• Available in 25 languages

ESA 875

Standard for APHS Hybrid / APHS PRO

The S875 W is our top-of-the-line CNC for press brakes. It offers highest performance, option fully 3D capabilities and a 21’’ multi-touch screen for the best operating experience you’ll ever have.

Features:

• 21’’ Multitouch Screen
• Windows 10 Operating System
• Ethercat/CAN open or Analog Axes Interface
• DXF, DWG import on control unit (Inclued to 3D Option)
• 3D is an option.

CYBELEC VISIPACK

Option for APHS Hybrid / APHS PRO

• Modern streamlined glass surface touch screen that can be used with gloves.
• 2D graphical profile drawing (Touch Profile) and 3D viewer
• Automatic bending sequence calculation.
• Highest precision of bending thanks to sophisticated algorythms.
• Tandem
• Tools import.
• Group management for complex production.
• Preliminary / Final bend.
• Hemming management.
• Running under Windows 10 for multitasking and networking.
• Angle measurement.
• Barcode reader
• Customizable Industry 4.0
• Running on Windows 10 with UWF cut off protection.

Optional Control Units

DELEM 53 Tx
Option for APHS / APHE

• Numerical touch screen programming
• 15″ high resolution color TFT
• Crowning control
• Servo and frequency inverter control
• Advanced Y-axis control algorithms for closed-loop as well as open-loop valves.
• USB, peripheral interfacing
• Profile-T offline software

DELEM 58 Tx
Option for APHS

• 2D graphical touch screen programming
• 18,5″ high resolution color TFT
• Bend sequence calculation
• Crowning control
• Servo and frequency inverter control
• Advanced Y-axis control algorithms for closed-loop as well as open-loop valves.
• USB, peripheral interfacing
• Profile-T offline software

DA-66T 2D
Option for APHS Hybrid / APHS PRO

• 2D graphical touch screen programming mode
• 17″ high resolution colour TFT
• Full Windows application suite
• Delem Modusys compatibility (module scalability and adaptivity)
• USB, peripheral interfacing
• User specific application support within the control's multitasking environment
• Sensor bending & correction interface Profile-TL offline software

DA-69T 3D
Option for APHS Hybrid / APHS PRO

• 3D and 2D graphical touch screen programming mode
• 3D visualisation in simulation and production
• 17″ high resolution colour TFT
• Full Windows application suite
• Delem Modusys compatibility (module scalability and adaptivity)
• USB, peripheral interfacing
• User specific application support within the control's multitasking environment
• Sensor bending & correction interface
• Profile-T3D offline software
• DXF part & tool import support

DELEM 69S / 66S
Option for APHS Hybrid / APHS PRO

• 3D and 2D graphical touch screen programming mode
• 3D visualization, including 3D machine representation, in simulation and production
• 24″ high resolution color TFT
• Delem Modusys compatibility (module scalability and adaptivity)
• USB, peripheral interfacing
• User specific application support within the control's multitasking environment
• Sensor bending & correction interface
Profile-S3D offline software

X Backgauge

Standard for APHS / APHE

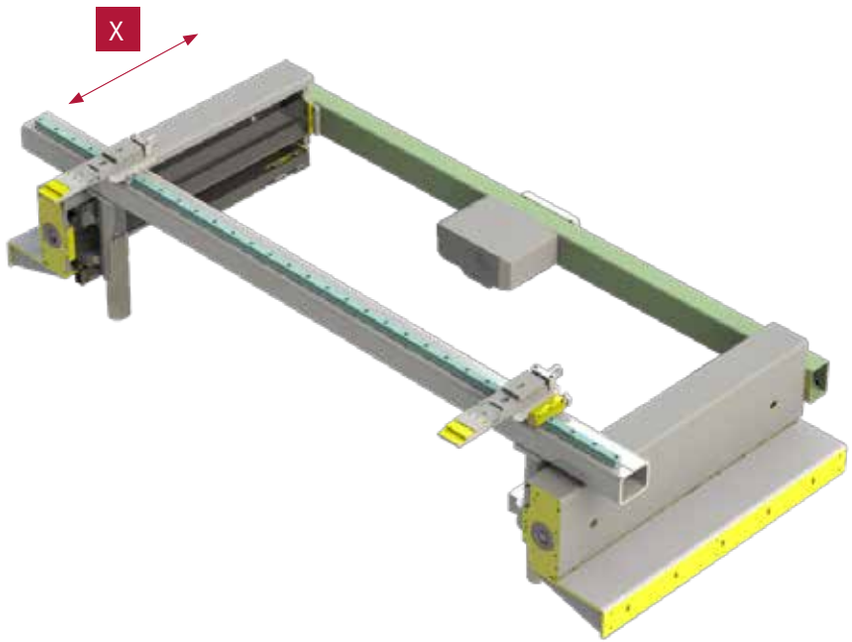

X+R Backgauge

Standard for APHS Hybrid / APHS PRO
Option for APHS / APHE

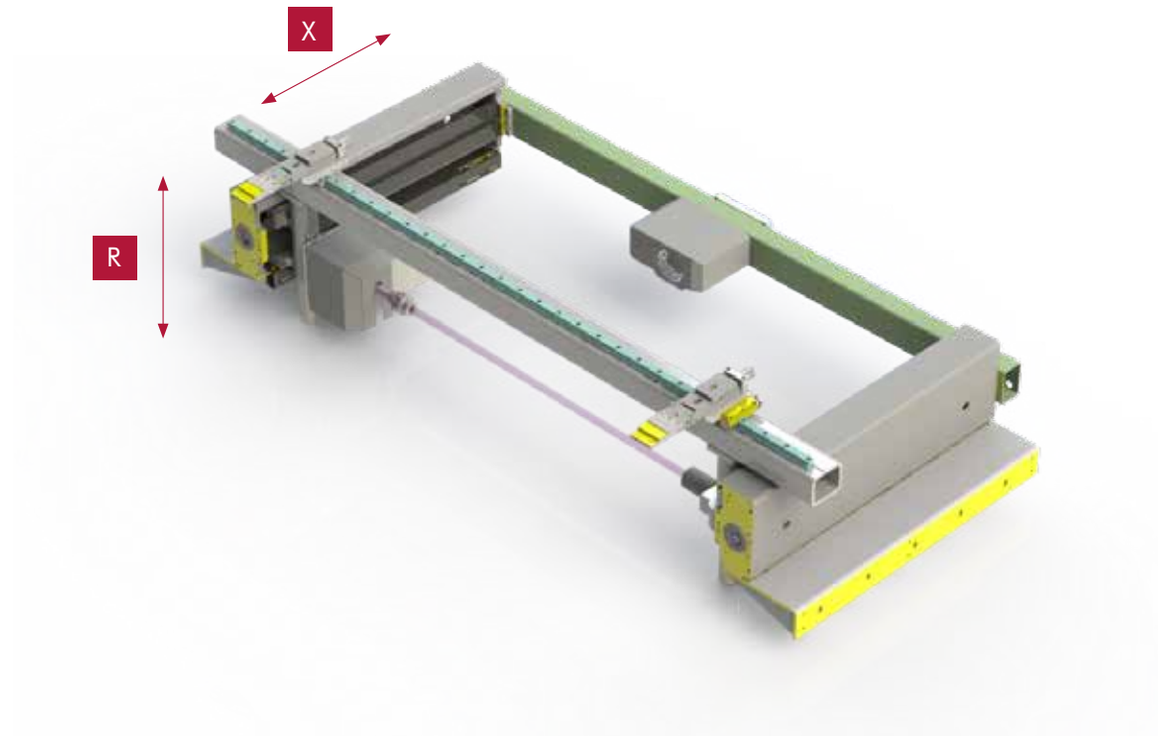

Backgauge is a crucial instrument when it comes to accurate processes. The system is CNC controlled and servo motor driven on two sided ballscrews so it locates itself fast and automatically according to the design and assists operator to position sheet metal with better accuracy for bending process.

Backgauges are produced from steel. Therefore, they are more accurate and reliable.

(For 4m and longer machines, 4 fingers are standard.)

Optional Backgauges

Option for APHS Hybrid / APHS PRO

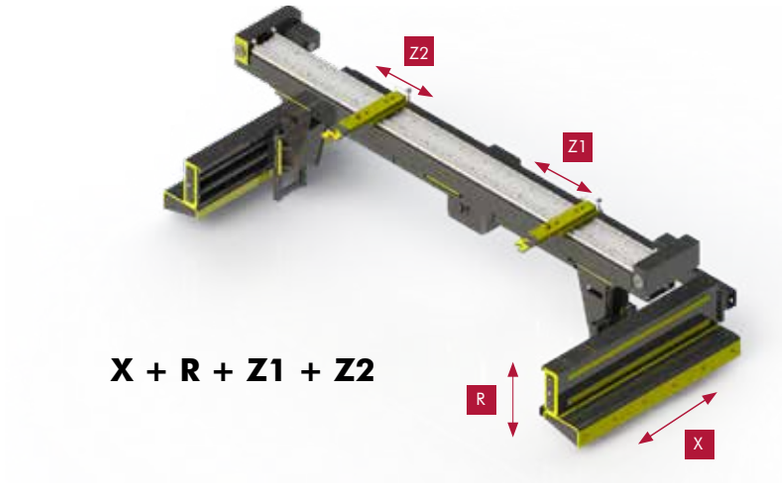

X + R + Z1 + Z2

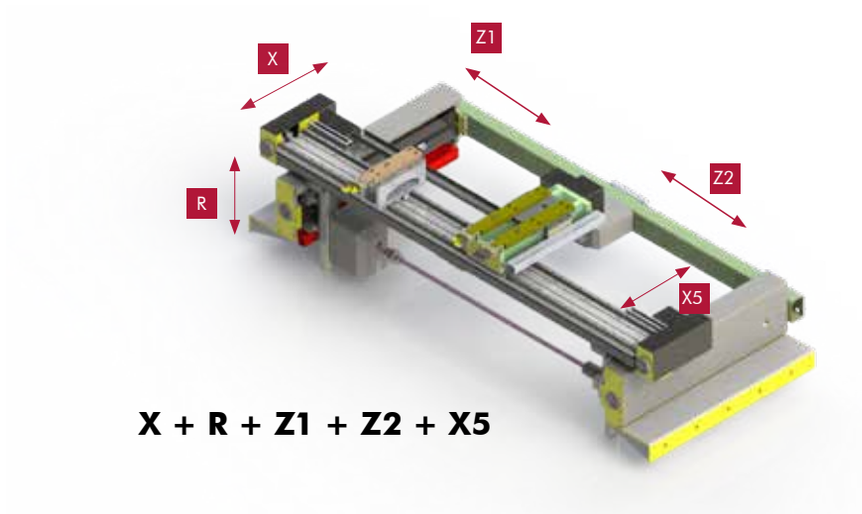

X + R + Z1 + Z2 + X5

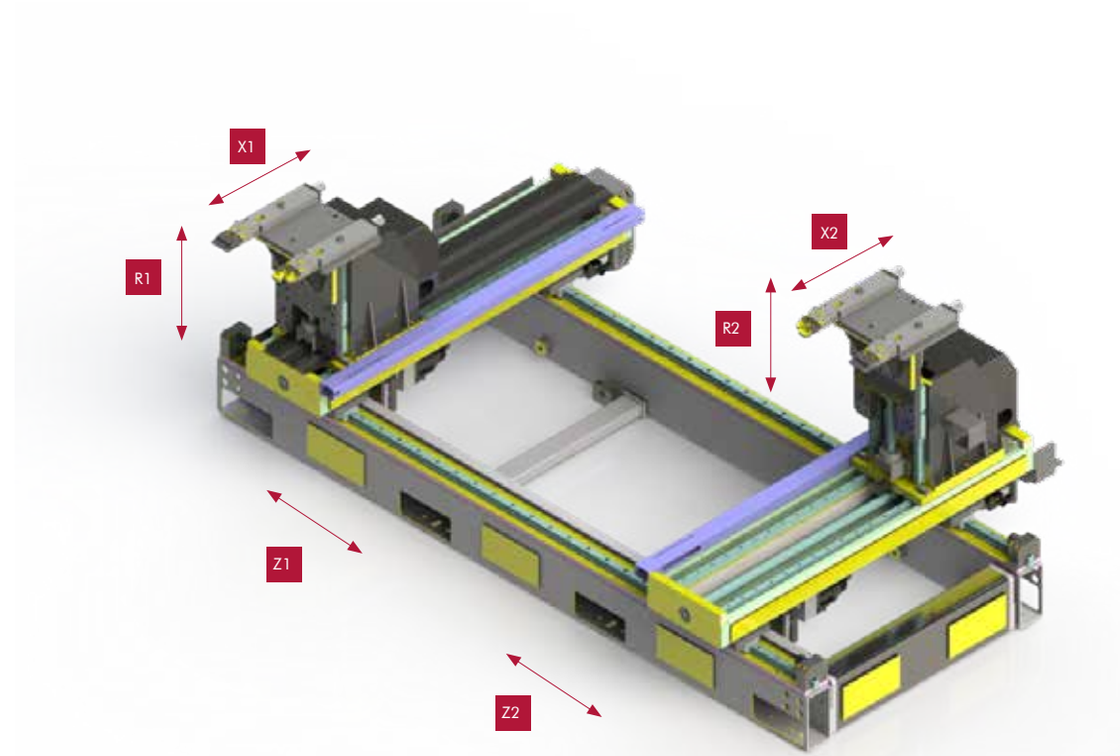

X1 + X1 + R1 + R2 + Z1 + Z2

TOWER TYPE

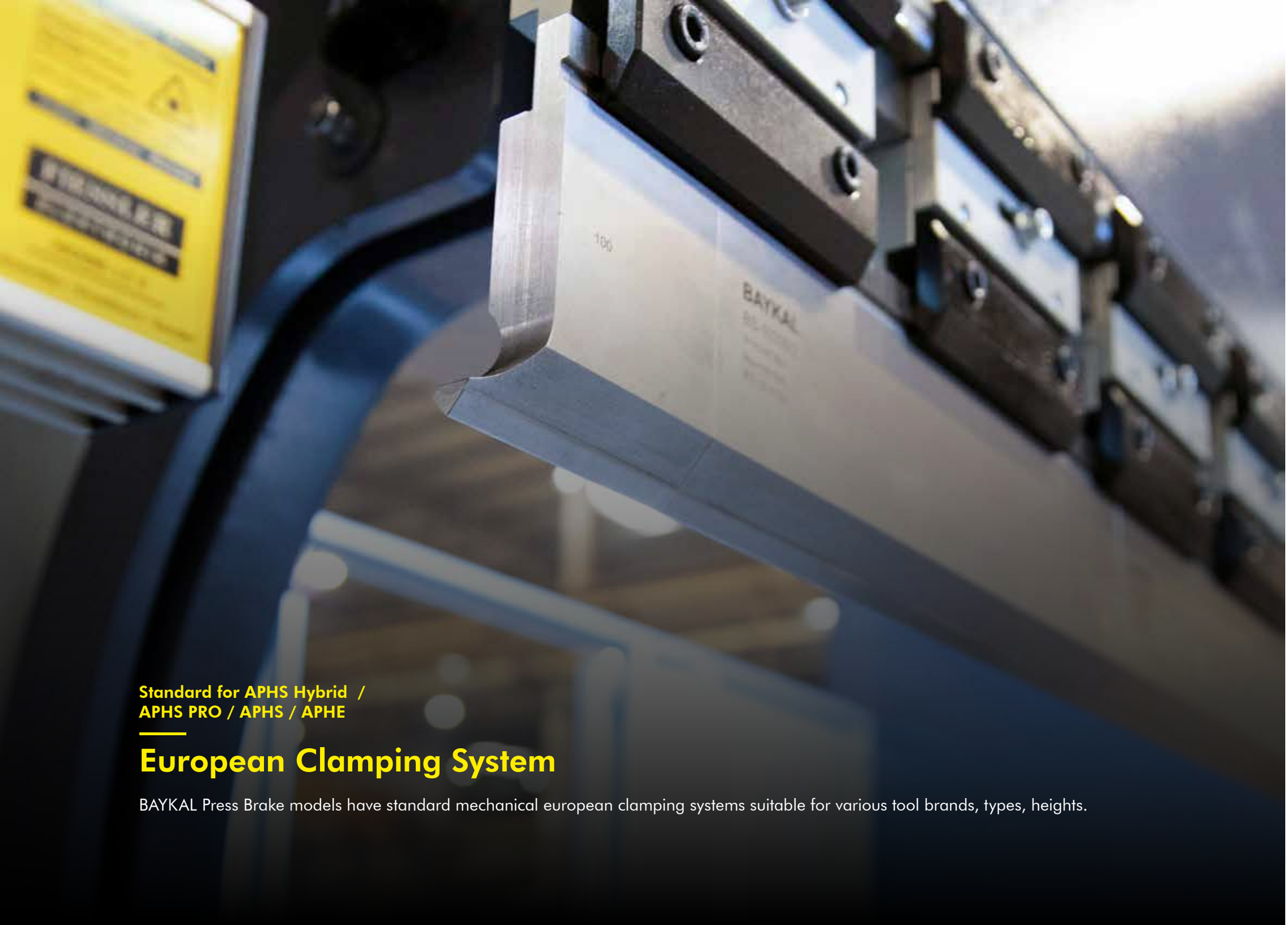

Standard for APHS Hybrid / APHS PRO / APHS / APHE

European Clamping System

BAYKAL Press Brake models have standard mechanical european clamping systems suitable for various tool brands, types, heights.

Optional Mechanical Clamping Systems

QUICK RELEASE

- Brand: BAYKAL
- Working Height: 100/120/150mm
- Width: 150mm
- Fast tool change
- Less downtime

Option for APHS Hybrid / APHS PRO / APHS / APHE

NSCL-I/MC PRO MECHANICAL

- Brand: WILA
- Clamping Type = Mechanical
- Working height H = 80mm
- Width W = 61mm

Option for APHS Hybrid / APHS PRO

ROLL 200 MANUAL

- Brand: ROLLERI
- Power: Manual
- Product type: Upper clamping
- Tonnage: 1000 kN/m max.

Option for APHS Hybrid / APHS PRO

NSCR-I/MC PRO MECHANICAL

- Brand: WILA
- Clamping Type = Mechanical
- Working height H = 95mm
- Width W = 95mm
- Max. load = 200ton/m

Option for APHS Hybrid / APHS PRO

Optional Hydraulic Clamping Systems

NSCL-I/HC PRO HYDRAULIC

- Brand: WILA
- Clamping Type = Hydraulic
- Working height H = 80mm
- Width W = 88mm
- Max. load = 180ton/m

Option for APHS Hybrid / APHS PRO

NSCL-II/HC PREMIUM HYDRAULIC

- Brand: WILA
- Clamping Type = Hydraulic
- Pressure surfaces CNC-Deephardened ® (2-4mm / 56-60 HRC)
- Working height H = 80mm
- Width W = 82mm
- Max. load = 250ton/m

Option for APHS Hybrid / APHS PRO

NSCR-I/HC PRO HYDRAULIC

- Brand: WILA
- Clamping Type = Hydraulic
- Working height H = 95mm
- Width W = 98mm
- Max. load = 200ton/m

Option for APHS Hybrid / APHS PRO

NSCR-II/HC PREMIUM HYDRAULIC

- Brand: WILA
- Clamping Type = Hydraulic
- Pressure surfaces CNC-Deephardened ® (2-4mm / 56-60 HRC)
- Working height H = 95mm
- Width W = 98mm
- Max. load = 300ton/m

Option for APHS Hybrid / APHS PRO

Optional Hydraulic Clamping Systems

SMART TOOL LOCATOR (STL)

Additional option for NSCL-II/HC
Option for APHS Hybrid / APHS PRO

ROLL 200 HYDRAULIC

- Brand: ROLLERI
- Power: Hydraulic
- Product type: Upper clamping
- Tonnage: 1000 kN/m max.

Option for APHS Hybrid / APHS PRO

POWER PACK

Power pack is necessary for hydraulic clamping systems. WILA and ROLLERI options are available.

Option for APHS Hybrid / APHS PRO

ROLL 200 KDS HYDRAULIC

- Brand: ROLLERI
- Power: Hydraulic
- Product type: Upper clamping
- Tonnage: 1000 kN/m max.

Option for APHS Hybrid / APHS PRO

*Double side clamping available

Standard for APHS Hybrid
Option for APHS PRO / APHS / APHE

Motorized Crowning

Hydraulic cylinder generate force downwards and this force distributes throughout upper and lower ram. However while side parts may apply the force completely, middle part may apply lesser due to deflection. Thus, the angle of middle part of sheet metal has different angle than other areas. In order to prevent this and have exact results, crowning is utilized. This instrument allows user to bend sheet metals with exact angles throughout the part.

Motorized crowning system is CNC controlled. Therefore adjustment is made precisely in short time. CNC automatically calculates deflections depending on material and brings perfect solutions.

Option for APHS Hybrid / APHS PRO / APHS / APHE

Laser Guard

Laser guard is essential on press brakes for CE standards and user protection.

Laser protective field between the transmitter and the receiver monitors the hazardous area underneath the top tool and guarantees protection from serious injuries which may occur to operator. Depending on the machine performance, press brake can be operated at high speed right before the top tool meets the sheet metal to be bent. The result is maximum safety at maximum productivity.

Laser guard system satisfy the necessity for CE conformity in required countries.

Optional Laser Guards

Akas II LC

Alignment is made manually. It allows press brakes perform fast downward movement until 10mm to clamping point.

Baykal also offers for special sliding feature, which allows fast tool change, for this system.

Option for APHS PRO / APHS / APHE

Akas 5 (Motorized)

Alignment is made automatically. Therefore it requires no manual alignment after tool change. It allows press brakes perform fast downward movement until 5mm to mute point.

Option for APHS PRO / APHS / APHE

Akas 5 (Manual)

Alignment is made manually. It allows press brakes perform fast downward movement until 5mm to mute point.

Option for APHS Hybrid / APHS PRO

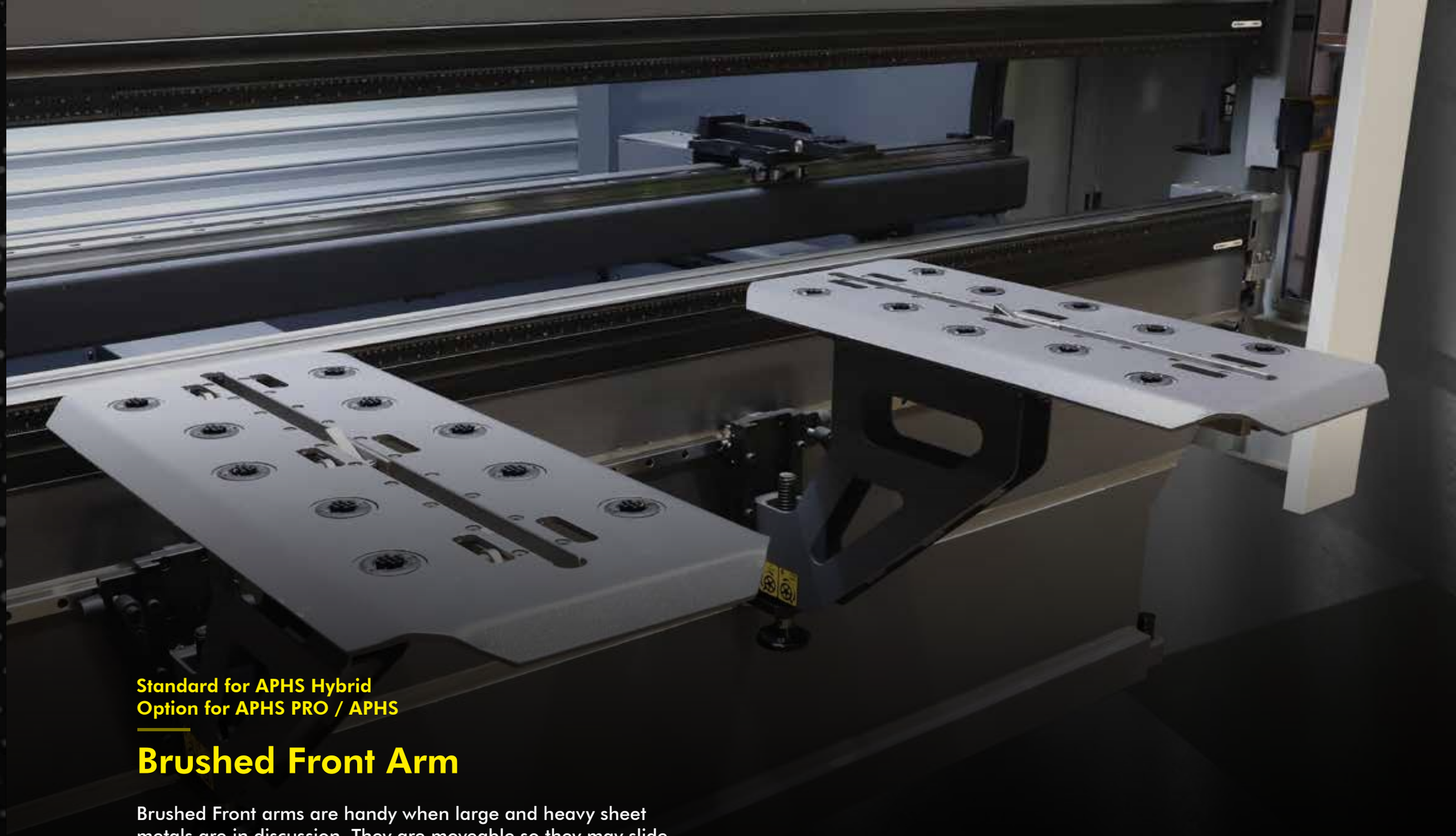

Standard for APHS Hybrid
Option for APHS PRO / APHS

Brushed Front Arm

Brushed Front arms are handy when large and heavy sheet metals are in discussion. They are moveable so they may slide linearly on the rail, and assist operator to align sheet metals better.

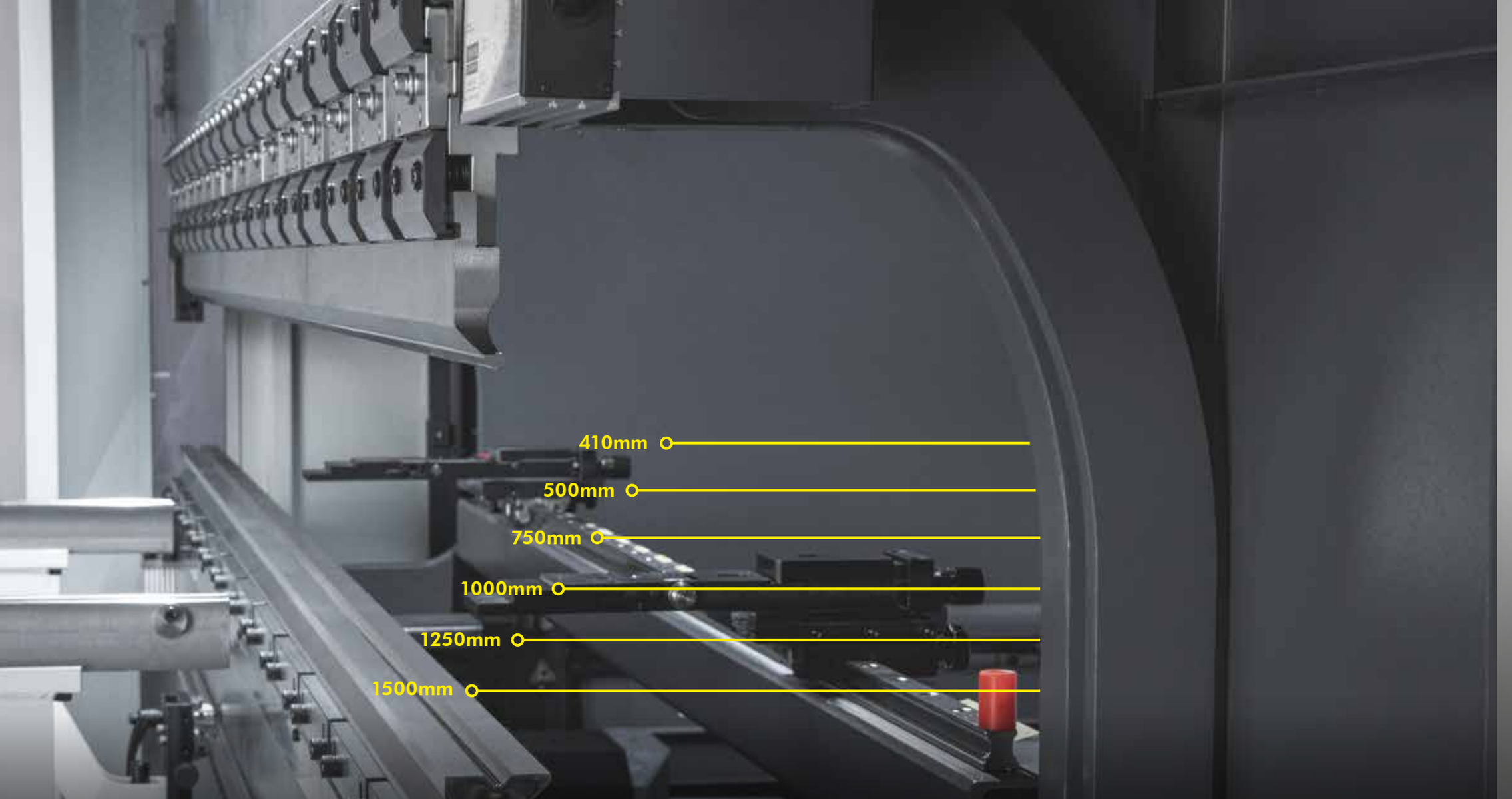

Available for APHS Hybrid / APHS PRO

Throat Depth

When long and wide sheet metals are to be bent, throat depth size becomes more crucial. BAYKAL Press Brake models are designed with wide throat. Therefore users may perform bending process for long sheet metals without any obstacle. BAYKAL Press Brake models may be customized with wider throats in order to satisfy customer requirements if requested.

Option for APHS Hybrid / APHS PRO

Sheet Following Arm (Optional)

Sheet following arm is suggested for BAYKAL Press Brakes when bending thin and long or heavy sheet metals are in discussion. Since the sheet following arm system may move up automatically according to the bending, it assists operator to perform bending process easily.

Sheet following arm system is driven by servo motor and controlled by CNC control unit.

125kg and 400kg carriage capacity sheet following arms are available as well as automatic R-axis movement for different height of tools.

Parking area is suggested for this system.

Option for APHS Hybrid / APHS PRO

Parking Area (Optional)

Parking areas is suggested for BAYKAL Press Brakes equipped with sheet following arm. It allows sheet following arm to be stored until next use.

Parking areas may have the capacity for single or double sheet following arm.

Option for APHS Hybrid / APHS PRO

Robot Interface (Optional)

Robot interface is a system that allows a robotic arm to collaborate with a press brake in a manufacturing environment. This interface is essential for automating the bending and forming of metal components, increasing efficiency, reducing the need for operator, and continuous production. This integration can significantly enhance manufacturing efficiency, accuracy, and consistency.

Option for APHS Hybrid /
APHS PRO

Angle Measuerement (Optional)

Angle measurement system, which has a motorized movement, is a technology used to accurately measure the angles of bends performed by a press brake during the bending process. This measurement ensures that the bent components meet the required specifications for high accuracy and valuable parts.

The system may consist 2 cameras depending on request.

Option for APHS Hybrid / APHS PRO

Tandem / Tridem / Quadrem (Optional)

It is possible to build a number of press brakes next to each other in tandem, tridem and quadrem allowing synchronous bending by multiple machines. These machines do not have to be identical. It means that very long products can be bent if more than one machine bends at the same time. It is also possible to bend shorter products using double capacity, the each press brake then operate separately. Versions and machine options depend on the machine type.

Option for APHS Hybrid / APHS PRO / APHS

Lubrication

Lubrication system provides lubrication to critical moving parts and components within the press brake machine. This system ensures that the machine operates smoothly and efficiently while reducing wear and tear on key components. Both manual and motorized version are optional for BAYKAL Press Brakes.

Option for APHS Hybrid /
APHS PRO / APHS

Motorized Lubrication (Optional)

Motorized lubrication system is equipped with a motor-driven pump that delivers lubricant to various points of the press brake where friction and motion occur. It automates the lubrication process, eliminating the need for manual greasing and reducing downtime.

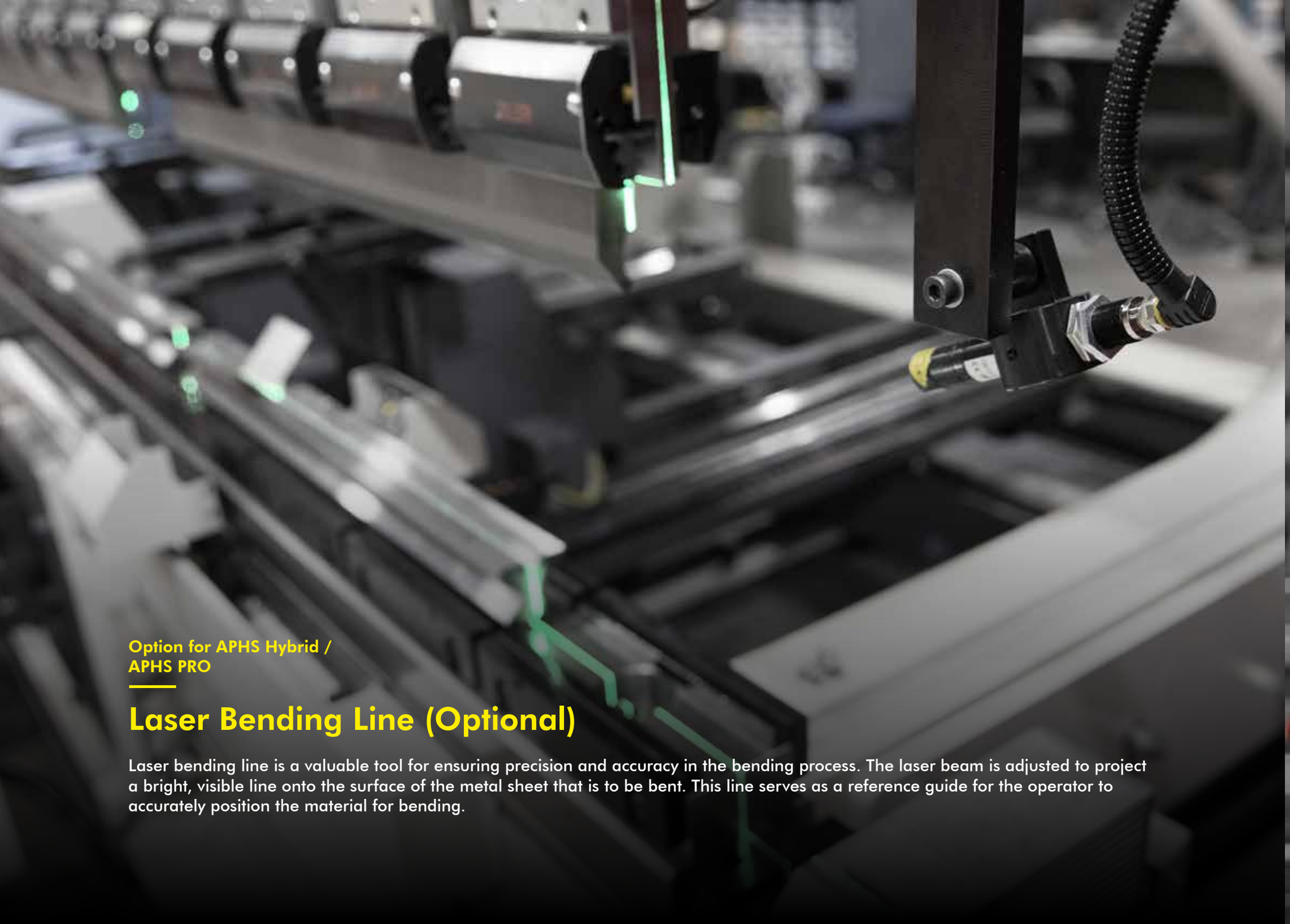

Option for APHS Hybrid / APHS PRO

Laser Bending Line (Optional)

Laser bending line is a valuable tool for ensuring precision and accuracy in the bending process. The laser beam is adjusted to project a bright, visible line onto the surface of the metal sheet that is to be bent. This line serves as a reference guide for the operator to accurately position the material for bending.

Option for APHS Hybrid

Speed Package (Optional)

Speed package is taken into consideration when high approach and return speed is preferred in the machines above 200 tons in order to increase productivity.

High Efficiency Hybrid Solutions

Baykal Hybrid with 2-tandem 6100mm x 600 tons press brake is engineered to optimize your industrial production processes. This tandem 600-ton hybrid system maximizes energy efficiency while enabling precision bending operations. With advanced engineering and modular design, it adapts seamlessly to all production needs and minimizes downtime in your operations.

Double efficiency with automation solutions

With its high-tech engineering, Baykal Machinery continues to offer flexible solutions for all your needs. Turn your direct bending operations into efficiency with Hybrid tandem press brake automation system. Moreover, minimise loss of time and efficiency.

SPECIAL PROJECTS

Precise power

The Baykal APHS 9100 mm x 1400 tons press brake ensures maximum bending accuracy with its single-body design. The extended throat gap and increased daylight provide flexible production capabilities. Its robust frame construction facilitates a faster and easier bending process, even for challenging bending applications. The mobile control unit offers a compact and efficient working experience.

APHS HYBRID
TECHNICAL DATA

APHS HYBRID										
Types		31120	31160	31200	31240	31300	41160	41200	41240	41300
Bending Length	mm	3100	3100	3100	3100	3100	4100	4100	4100	4100
Bending Force	Tons	120	160	200	240	300	160	200	200	300
Oil Tank Capacity	lt	2x34.5	2x55	2x55	2x55	2x55	2x55	2x55	2x55	2x55
Motor Output	kW	2x6	2x9.2	2x9.2	2x9.2	2x9.2	2x9.2	2x9.2	2x9.2	2x9.2
Daylight Opening	mm	540	540	530	530	660	530	530	530	635
Stroke	mm	260	260	260	260	320	260	260	260	320
Throat Gap	mm	410	410	410	410	500	410	410	410	500
Approach	mm/s	200	200	200	160/200*	140/200*	200	200	160/200*	140/200*
Working	mm/s	10	10	10	8/10*	7/10*	10	10	8/10*	7/10*
Return	mm/s	200	200	200	160/200*	140/200*	200	200	160/200*	140/200*
X Axis Range	mm	750	750	750	750	750	750	750	750	750
X Axis Speed	mm/s	350	350	350	350	350	350	350	350	350
X Axis Precision		0,03	0,03	0,03	0,03	0,03	0,03	0,03	0,03	0,03
R Axis Range	mm	160	160	160	160	160	160	160	160	160
R Axis Speed	mm/s	240	240	240	240	240	240	240	240	240
R Axis Precision		0,05	0,05	0,05	0,05	0,05	0,05	0,05	0,05	0,05

Design and specifications are subject to change without notice

APHS PRO
TECHNICAL DATA

APHS PRO																						
Types			125040	21060	26090	31090	31120	31160	31200	31240	31300	31440	41160	41200	41240	41300	41440	61240	61300	61380	61440	61600
Capacity		kN	400	600	900	900	1200	1600	2000	2400	3000	4400	1600	2000	2400	3000	4400	2400	3000	3800	4400	6000
Motor Output		kW	4	5,5	7.5	7.5	11	15	19	22	22	30	15	18,5	22	22	30	22	22	30	30	37
Oil Tank Capacity		Lt	80	140	140	140	140	210	210	210	280	450	210	210	210	280	450	300	300	450	450	500
Speeds (mm/s)	Approach		160	150	150	160	160	160	150	130	110	80	170	160	150	120	80	140	120	90	90	80
	Working		10	10	10	10	10	10	10	10	8	8	10	10	10	8	8	10	8	8	8	7
	Return		130	130	130	130	130	130	130	120	100	70	120	110	100	90	70	100	70	70	70	70
Approx. Weight		Ton	3.3	5.4	7.1	7.9	8.4	9.7	10	11	15	22	12	12.5	14	18.5	26	25	30	35	39	55
Bending Length	A	mm	1250	2100	2600	3100	3100	3100	3100	3100	3100	3100	4100	4100	4100	4100	4100	6100	6100	6100	6100	6100
Inside Frames	B	mm	1070	1600	2050	2550	2550	2550	2550	2550	2550	2550	3550	3550	3550	3550	3550	5100	5100	5100	5100	5100
Side Frame Width	C	mm	1470	1580	1580	1590	1590	1600	1600	1610	1815	2060	1600	1600	1610	1820	2235	1960	2060	2210	2250	2400
Bed Height	G	mm	800	880	880	880	880	880	880	880	905	1005	880	880	880	980	955	1100	1115	1100	1100	1050
Daylight Opening	K	mm	455	475	540	530	540	540	530	530	660	575	530	530	530	635	590	500	560	570	570	620
Stroke	L	mm	215	210	260	260	260	260	260	260	320	320	260	260	260	320	320	260	320	320	320	360
Table Width	M	mm	60	60	60	60	60	60	90	90	380	450	60	90	90	280	380	90	200	240	280	380
Throat Gap	N	mm	410	410	410	410	410	410	410	410	500	500	410	410	410	500	500	500	500	500	500	500

Design and specifications are subject to change without notice

APHS
TECHNICAL DATA

APHS																
TYPES			12540	21060	26090	31090	31120	31160	31200	31240	31300	31440	41160	41200	41240	41300
Capacity		kN	400	600	900	900	1200	1600	2000	2400	3000	4400	1600	2000	2400	3000
Motor Output		kW	4	5,5	7.5	7.5	11	15	19	22	22	30	15	18,5	22	22
Oil Tank Volume		Lt	80	140	140	140	140	210	210	210	280	450	210	210	210	280
Speeds (mm/s)	Approach		160	150	150	160	160	160	150	130	110	80	170	160	150	120
	Working		10	10	10	10	10	10	10	10	8	8	10	10	10	8
	Return		130	130	130	130	130	130	130	120	100	70	120	110	100	90
Approx. Weight		Ton	3.3	5.4	7.1	7.9	8.4	9.7	10	11	15	22	12	12.5	14	18.5
Bending Length	A	mm	1250	2100	2600	3100	3100	3100	3100	3100	3100	3100	4100	4100	4100	4100
Inside Frames	B	mm	1070	1600	2050	2550	2550	2550	2550	2550	2550	2550	3550	3550	3550	3550
Side Frame Width	C	mm	1470	1580	1580	1590	1590	1600	1600	1610	1815	2060	1600	1600	1610	1820
Bed Height	G	mm	800	880	880	880	880	880	880	880	905	1005	880	880	880	980
Daylight Opening	K	mm	455	475	540	530	540	540	530	530	660	575	530	530	530	635
Stroke	L	mm	215	210	260	260	260	260	260	260	320	320	260	260	260	320
Table Width	M	mm	60	60	60	60	60	60	90	90	380	450	60	90	90	280
Throat Gap	N	mm	410	410	410	410	410	410	410	410	500	500	410	410	410	500

Design and specifications are subject to change without notice

ACAT

SOCIO COMERCIAL EN MÉXICO

Oficina Matriz

Av. Regio Parque #200, Regio Parque Industrial,
Apodaca N.L. C.P. 66633

www.acatmexicana.com

acat@acatmexicana.com

TEL. 81 8354 8910

O.S.B. Lacivert Cd. 2.Sk. No.1/A 16140 Nilüfer BURSA/TURKEY
T : +90 224 294 77 00 F : +90 224 243 12 86
E-mail : baykal@baykal.com.tr

/ BaykalMachinery

09 / 2024